HSF RoHS

FILE NO :E362810

SPECIFICATIONS
Rated Current:1.0AMP
Contact Resistance:20mΩ Max
Withstand Voltage:500V AC/DC
Insulation Resistance:1000MΩ Min
Operation Temperature:−40°c to +105°c

Contact Material:Brass
Contact Plating:Au or Sn Over Ni
Insulator Material:Polyester(UL94V−0)
Standard: PA6T
Max.Processing Temp: 230°C for 30−60 seconds
(260°C for 10 seconds)

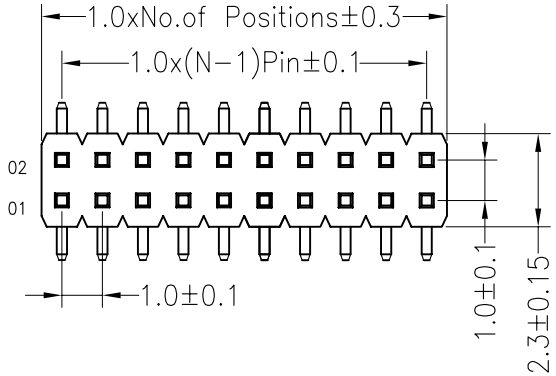

Recommended P.C.B Layout(Top Side)
(PCB BOARD TOLERANCE±0.05)

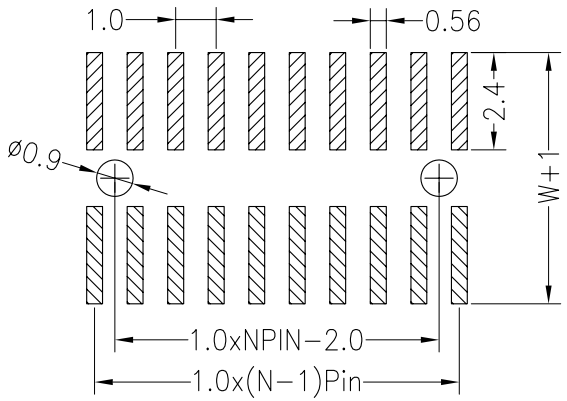

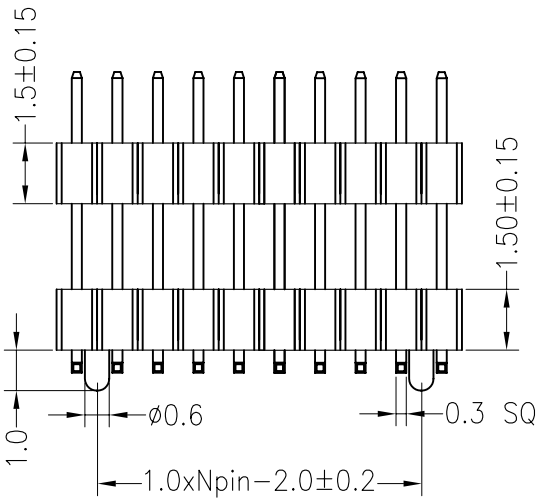

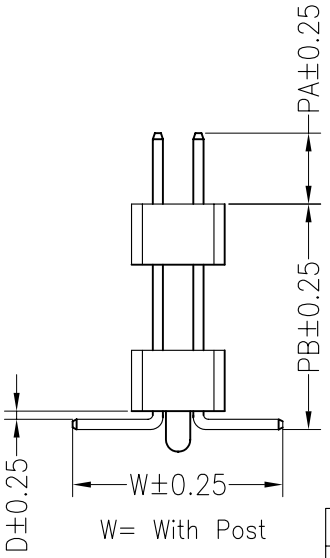

W= With Post

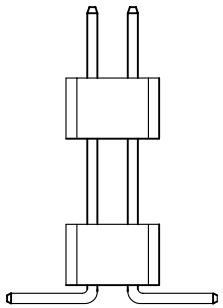

N= W/O Post

Ordering Information

16152 2 XX X X XX M XXX X 01

- No.of Pins Per Row: 2*1~2*50
- Insulator Material Option: A=BK−PBT, B=BK−PA66, C=BK−PA6T, D=BK−PA46, F=BK−LCP
- Post: W=With Post, N=W/O Post
- Contact Plating: G0:Gold Flash, G2:5U" Gold, G3:10U" Gold, G4:15U" Gold, G5:30U" Gold, S0:Gold Flash/Tin, SN:Tin
- Pin Length
- Packing: T=Tube, P=Tube+Cap, R=Reel+Cap, M=Reel+Mylar

Dimension antitheses list

ITEM	PA	PB	D	W	L
Standard	1.80	6.90	0.10	5.00	10.4
Alternate					

REV	DATE	MODIFICATION DESCRIPTION	CHANGE
A0	2012.04.19	NEW DRAWING	

OPERATION	
X.X	±0.30
X.XX	±0.20
X.XXX	±0.10
Angle	±3°
DIM	TOL

DRAW	Ben	12.04.19
CHECK		
APPROVE		

SCALE	FIT
UNIT	mm
SIZE	A4
SHEET	1/1
PROJ.	

JiLN® 深圳市锦凌电子有限公司
SHENZHEN JINLING ELECTRONIC CO.,LTD
Tel：86-755-2997-5806/5802 Fax：86-755-2997-5992

PART NO.	161522XXXXXXMXXXX01
TITLE:	1.00PH 2+H1.5mm 2xnPin SMT